strickland tracks
Strickland Tracks Limited
Heath Park, Cropthorne, Pershore
Worcestershire WR10 3NE ENGLAND

Reference: EG155 Rev: 4

Date: 20/01/2023

INSTALLATION, OPERATION AND MAINTENANCE MANUAL

ENGLISH | ORIGINAL INSTRUCTIONS

WARNING

Do not attempt to operate these track systems unless you have read and understood these instructions.

t: +44 (0)1386 862800 e: tracksystems@stricklandtracks.com w: www.stricklandtracks.com

Registered Address: Strickland Tracks Limited, Heath Park, Cropthorne, Pershore, Worcestershire WR10 3NE ENGLAND

Company Registration No. 034 77947
V.A.T Registration No. GB 349 3082 45

CONTENTS

SECTION 1: GENERAL INFORMATION

SECTION 2: TRACK SYSTEM INSTALLATION

SECTION 3: BASIC MAINTENANCE

SECTION 4: WEAR LIMITS

SECTION 5: TROUBLESHOOTING

SECTION 6: APPENDIX

SECTION 1:
GENERAL INFORMATION

1.1 MANUFACTURER'S STATEMENT

Relevant to the incorporation of track systems into host machines.

The tracked undercarriage system is designed as a modular unit for integration to a host machine. It is not intended to be cycled, driven or operated in the free-standing condition.

Strickland Tracks Ltd. will not be held responsible for the attachment method to the host machine and/or any failures of the crawler track system relating to these procedures unless approved in writing by ***Strickland Tracks Ltd***.

Modification or abuse of the original design may negate manufacturer's warranty or guarantee which could conflict with health and safety standards and should not be undertaken without prior consultation with the manufacturer. For full warranty cover, any modification or attachment must be approved in writing by ***Strickland Tracks Ltd.***

This installation, operation and maintenance manual must be issued to the machine user, ***Strickland Tracks Ltd.*** will not be held responsible for any misuse or failure due to lack of maintenance of the track system in accordance with instructions in this manual. Failure to issue this manual to the machine user will invalidate the track systems warranty.

For further details, please refer to Strickland standard Terms and Conditions of sale. No claims of whatever nature for work carried out to a Strickland crawler undercarriage in the warranty period will be entertained unless we have given our prior authorisation in writing for work or replacements to be fitted. Any modification to a Strickland undercarriage must be pre authorised by Strickland. Failure to notify Strickland could ultimately void the warranty.

Helpline is available Monday to Thursday from 8am to 5pm and 8am to 3:30pm on Friday. This is for procedures relating to; attachment, safety, operating or maintenance.

1.2 INTRODUCTION

The purpose of this manual is to allow customers to correctly install, operate and maintain the crawler track system undercarriage on the appropriate machine.

- Read this manual with care before conducting any maintenance work on undercarriage supplied by ***Strickland Tracks Ltd***.
- Continuous improvements to undercarriages produced by ***Strickland Tracks Ltd***, may result in some of the illustrations in this manual being different from the actual parts used.
- It is necessary when requesting any spare parts, that all serial numbers relating to the undercarriage are quoted.
- For full technical support contact our Head Office at:

Strickland Tracks Limited

Heath Park
Main Road
Cropthorne, Pershore
Worcestershire
WR10 3NE
ENGLAND

Tel No: +44 (0)1386 862800
E-mail: tracksystems@stricklandtracks.com
Website: www.stricklandtracks.com

Note: For a comprehensive parts list breakdown/hydraulic installation/technical information for your relevant track system, please refer to the separate ***Parts List and Hydraulic Specifications (Parts Supplement)*** document.

Electronic versions are available at www.stricklandtracks.com by entering your password, which can be obtained by directly contacting us.

Below are typical screenshots for *Parts List and Hydraulic Specification* documents.

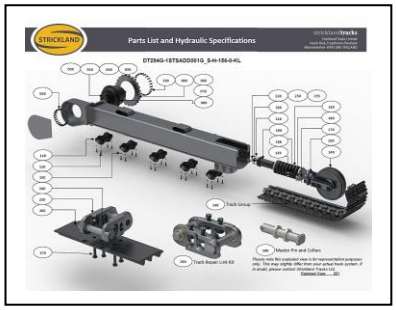

Parts Breakdown

Parts list

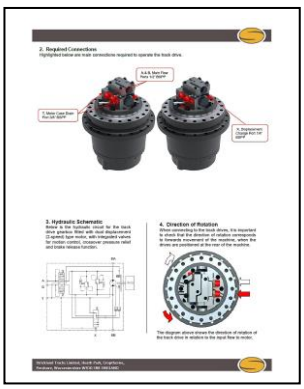

Hydraulic parts list and hydraulic installation information

Track drive ports, operating Pressure and flow information

1.3 UNDERCARRIAGE IDENTIFICATION

All track systems manufactured by ***Strickland Tracks Ltd.*** can be identified through a 6-digit serial number. This serial number is recorded along with other information on the Identification Plate. Below is a typical image of an identification plate.

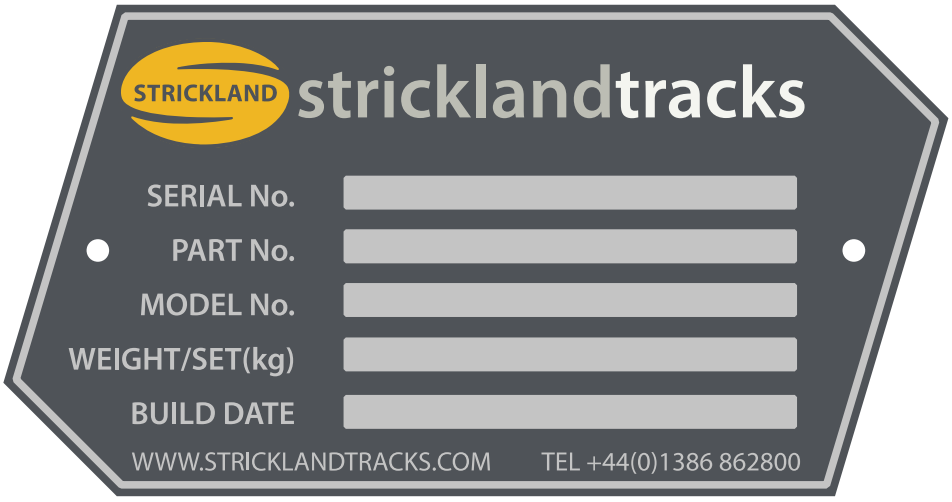

This identification plate is generally located on the outside face of each left- and right-hand track frame fabrications, forward from the drive end of the tracks.

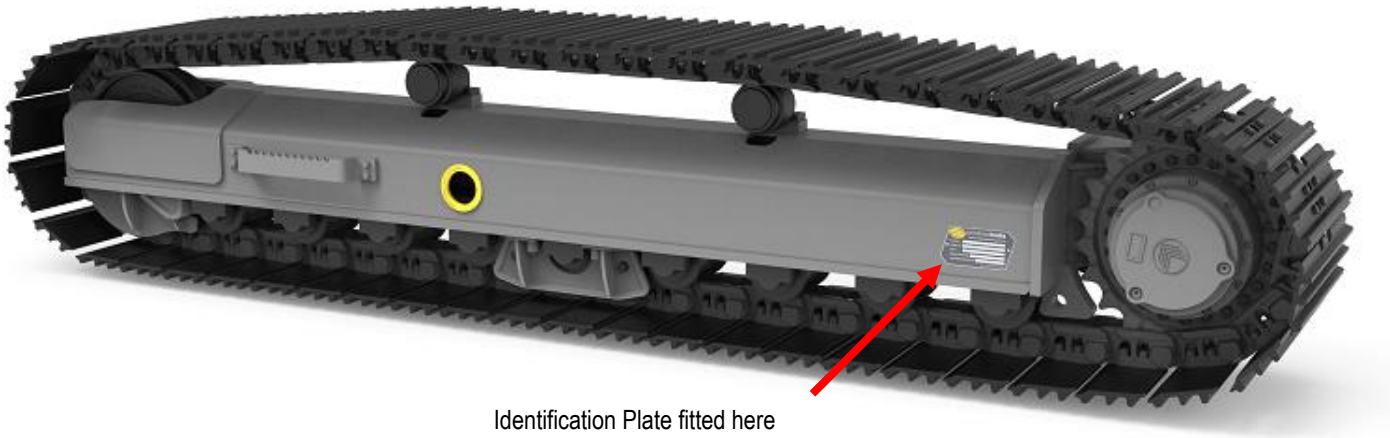

Identification Plate fitted here

1.4 GENERAL SAFETY AND ACCIDENT PREVENTION

Please ensure all safety precautions and instructions are adhered to when installing, operating and/or performing maintenance on the track systems.

1.4.1 Protective Equipment

Always wear protective clothing and footwear as required by job conditions when working around this product. Wear protective glasses when in risk of splintering debris. Use welders' gloves, facial/eye protection and other protective clothing appropriate to welding job being performed. Avoid loose clothing.

1.4.2 Unauthorised Modifications

It is important not to carry out modifications to the track system which could compromise proper operation and safety. ***Strickland Tracks Ltd*** is not responsible for any injury or damage caused by unauthorised modifications.

1.4.3 Pressurised Items

Avoid welding near pressurised hydraulic pipelines, track tensioner, track recoils or other flammable materials. Excessive heating near to pressurised hydraulic pipelines can cause failure, generating a flammable spray with the possibility of severe injuries to nearby persons.

1.4.4 Lifting

Use a hoist when lifting components weighing more than 23 Kg (50lbs). Ensure all hooks, chains, slings etc., are in good condition and used within the manufacturers recommendations.

1.5 SAFE LIFTING AND HANDLING OF TRACK SYSTEM

Always check the weight stamped on the identification plate before lifting or moving the track system.

1.5.1 Using Overhead Crane

When using overhead cranes to lift or move a track system, choker chains must be used. Wrap the choker chains around the top of track groups by inserting one lifting eye of the chain through the opposing eye, as illustrated in picture below.

For safety reasons, always use two choker chains in the positions shown below, for even weight distribution of the track system.

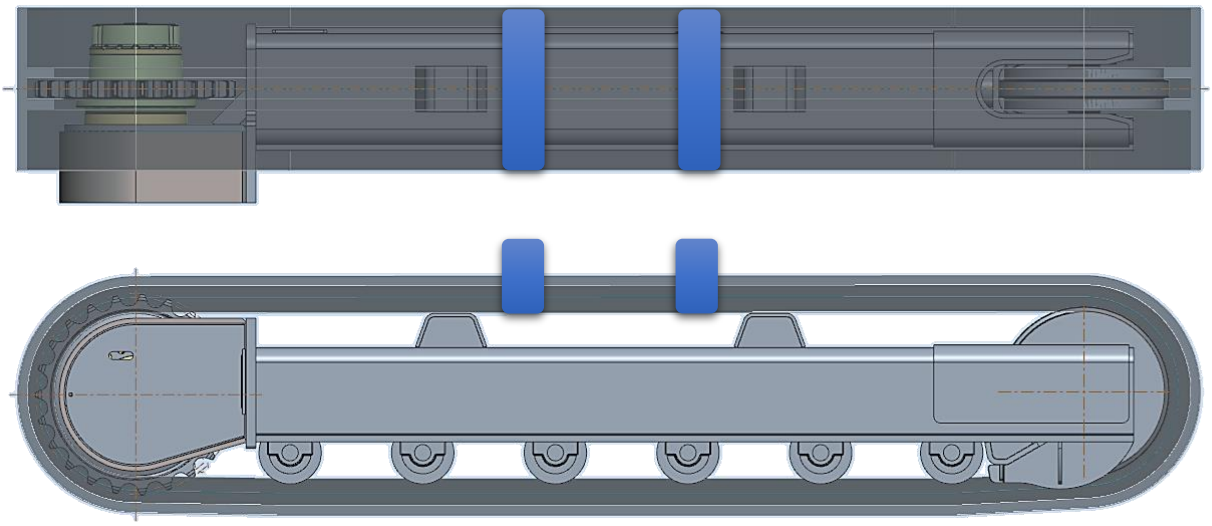

Ensure the adjoining sling which connects the choker chains to the crane hoist has an adequate load rating.

The following pictures demonstrate a track system being safely lifted in the air using an overhead crane with choker chains.

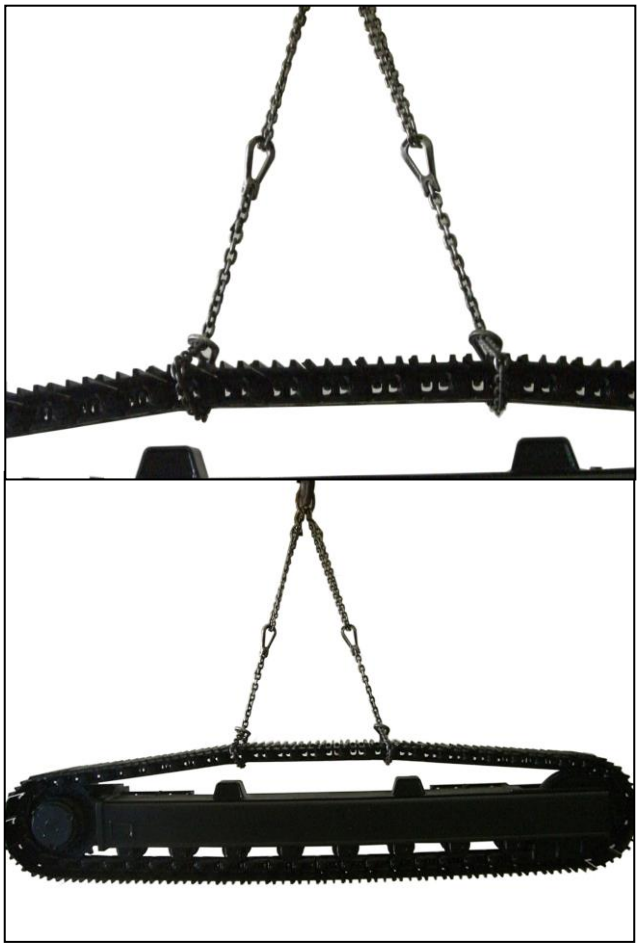

PRECAUTIONS

- Chains, sling and hoists are identified by their safe-load lifting capacities.
- Do not lift loads exceeding the rated capacity of chains, sling or hoists.
- Raise and lower track systems slowly and avoid quick starts or stops.
- When moving the raised track system, always keep it as close to the floor as possible. If the load starts swinging, stop the crane to avoid any accidental damage to the track system or injuries to any persons nearby.

1.5.2 Using Forklift Truck

When using a forklift truck to lift the track system, where possible, position the forks under the roller mounting plates. Ensure that the forks are evenly positioned between the lower rollers to balance the track system properly as shown below.

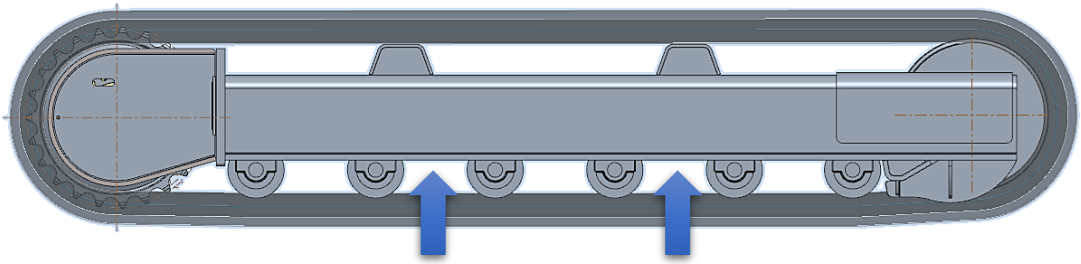

Ensure the forks reach through the track system to the other side of the roller mounting plates, supporting the track system fully as demonstrated below.

The picture shown below illustrates a track system lifted safely and correctly using fork lift truck.

PRECAUTIONS

- Ensure the total weight of the track system does not exceed the safe load capacity of the forklift truck.
- Ensure each track system is lifted as a single unit not in pairs.

1.6 OPERATING PRECAUTIONS

When travelling up a gradient, the tracks should be driven forward (i.e. idlers first, drive sprocket to the rear). When travelling down a gradient, tracks should be driven sprocket first.

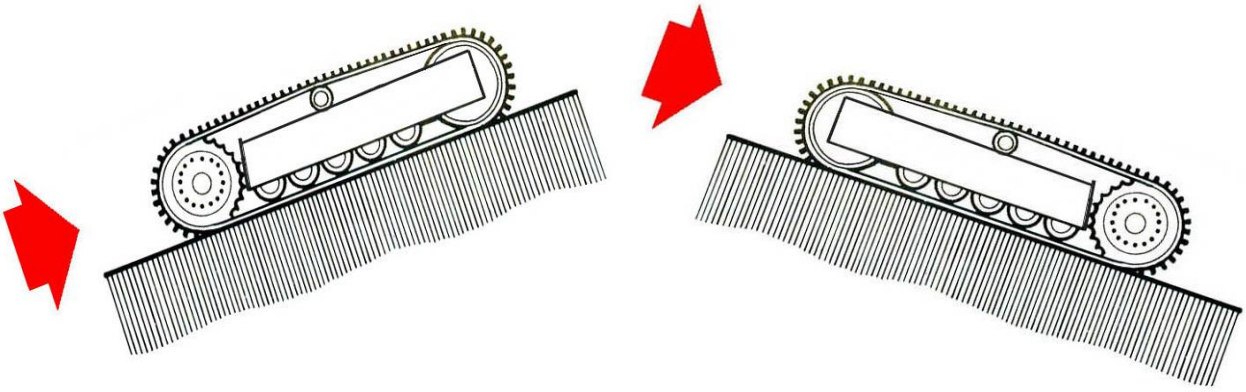

ALWAYS:

Park the machine on flat, level ground. If it is necessary to park the machine on a gradient, the tracks should be solidly blocked.

- Ensure the terrain the machine is working on is firm enough to adequately support the machine.
- Make certain the machine is tracked at least 10m in either direction on a daily basis, to minimise risk of track chain seizure.
- Ensure the track systems are free from debris before moving the machine.
- Make certain the tracks are not frozen to the ground before moving the machine.
- Ensure no leakage of oil from gearbox, roller and idler before and during tracking.
- Stop the machine for 30 minutes after tracking it continuously for 30 minutes, to allow the components to cool down.

NEVER:

- Attempt to track the machine if there is any buildup of material around the tracks and drive sprockets.
- Attempt to track the machine if the tracks are frozen to the ground.
- Push or tow the machine when it is unable to free itself.
- Track the machine constantly more than 30 minutes without providing adequate rest.

IF IN DOUBT, PLEASE CONTACT HELPLINE +44 (0)1386 862800

WARNING

Failure to observe the above precautions could result in danger to persons and damage the track system and may also invalidate the warranty.

1.7 WORKING CONDITIONS

1.7.1 Working Material

If your machine will be working in materials which can cause corrosion to carbon steel, you must replace the standard track chains with lubricated chains to avoid seizure of the track joints. Lubricated track chains are available as an optional extra from new or as a retrofit for customers entering adverse working conditions.

1.7.2 Operating Temperature

The operating temperature range for track systems is -20°C / +90°C (- 4°F / +194°F). Always consult ***Strickland Tracks Ltd.*** when temperatures fall outside this working range, as alternate component specifications will be required.

1.8 ENVIRONMENTAL MANAGEMENT

1.8.1 Disposal of Track Systems:

A. Steel Parts without oil or grease should be disassembled and recycled.

B. Steel Parts that contain oil or grease should be dismantled and pollutants such as oil or grease to be dispensed correctly. All steel parts can then be recycled.

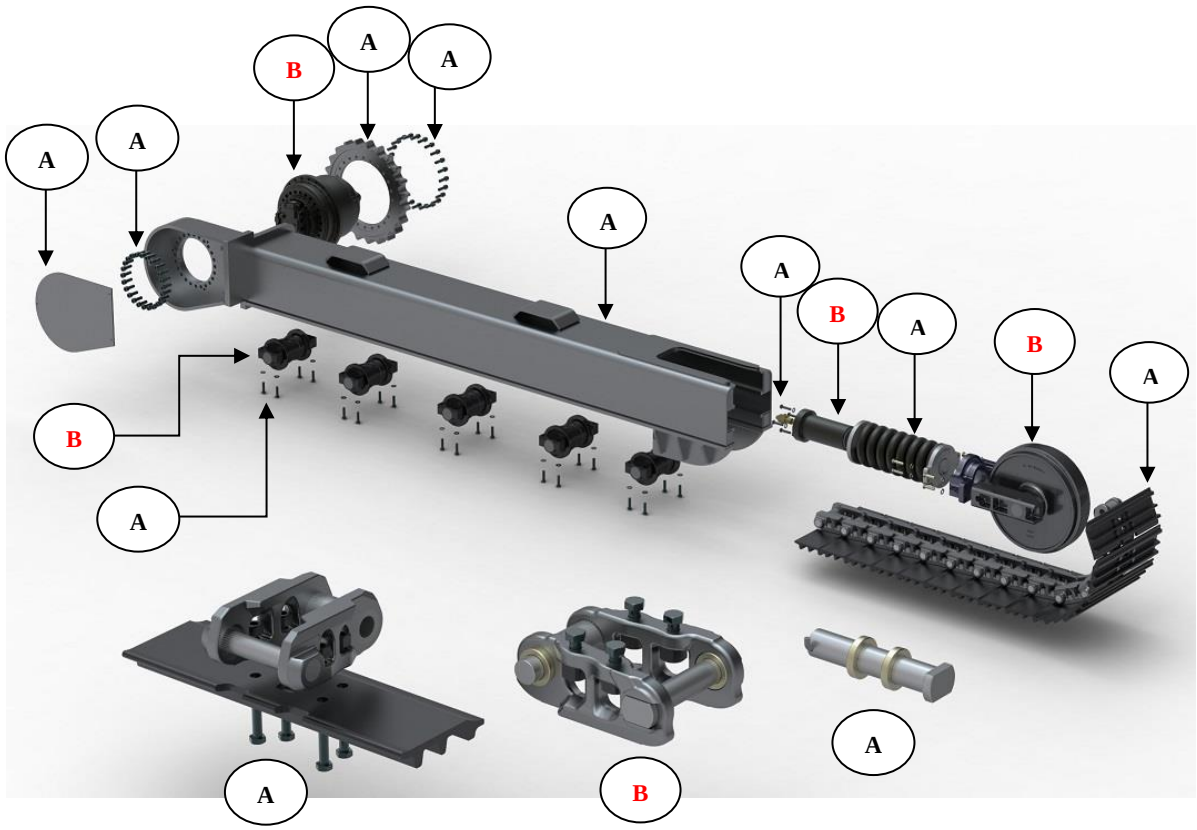

IF IN DOUBT, PLEASE CONTACT STRICKLAND TRACKS +44 (0)1386 862800

SECTION 2:
TRACK SYSTEM INSTALLATION

2.1 INSTALLATION OF TRACK SYSTEMS

2.1.1 Installation of Weld-on Track System

Weld-on track systems are installed onto machines by welding the track fabrication to structural members of chassis. When welding the track system to machine chassis, the following points must be considered:

- Track system should be welded onto chassis within the permitted welding area.
- Highlighted in red are the recommended welding positions.
- It is highly recommended to weld structural members of the chassis back to the division plate of frame.

- Where possible, ensure the structural members of the chassis are welded onto the track system in line with internal stiffener plates to evenly distribute machine load.
- For proper load distribution, we highly recommend welding connections across the top of the U-pressing and the lower roller mounting plates as shown below.

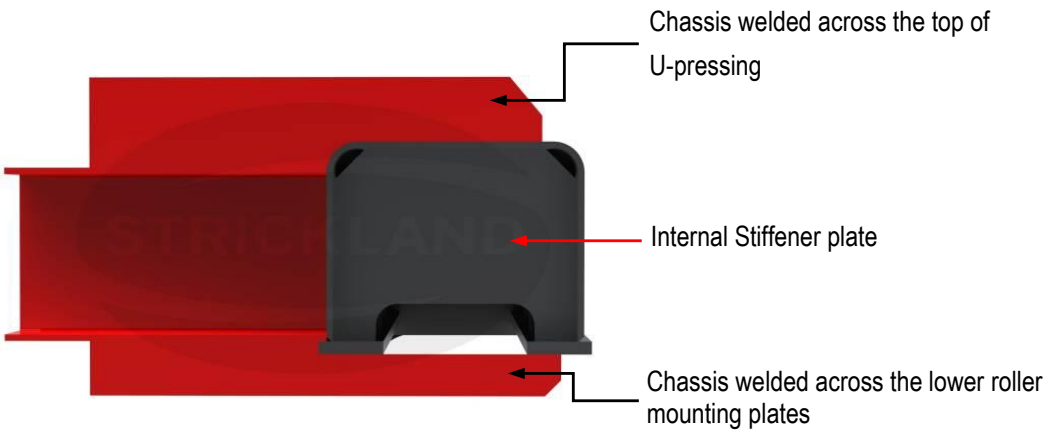

2.1.2 Installation of Bolt-on Track System

Strickland Tracks Ltd offer a wide range of bolt on track systems which assemble on to the machine via mounting plates, mating to opposing plates on the host chassis. The image below shows a typical bolt on track system with mounting plates.

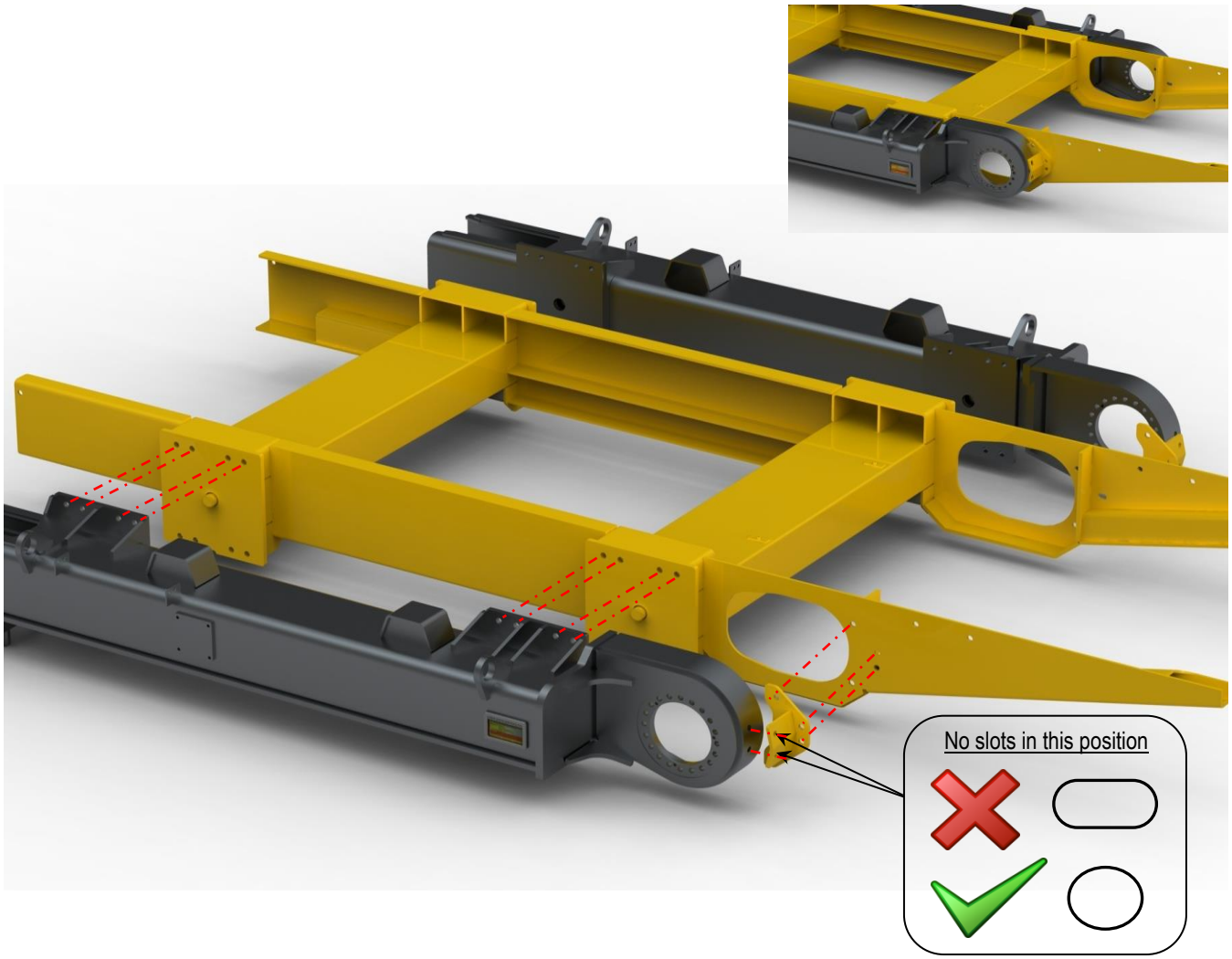

In most cases where mounting plates are adopted, there is need to reduce the drive housing section. Due to the reduction of strength this causes, the drive housing must be connected to the chassis using a substantial bracket, creating a rigid connection (typically shown in the above image).

When considering the design of bracket, always ensure slots are not used in the horizontal plane.

PRECAUTIONS

- Prior to assembling track systems, remove any grease or rust left on the machine face of brackets for secure assembly.
- Chassis mounting plates must maintain a flatness to suit the flatness tolerance of mounting plate on the track system. Failure to maintain this tolerance could result in misalignment of the track system installation.

2.1.3 Undercarriage alignment

In order for prolonged life of undercarriage and components, it is essential the connection to the host machine is carried out correctly. Failure to do so will result in excessive wear or in extreme cases undercarriage failure.

Tracks must be fitted parallel to each other and the machine.

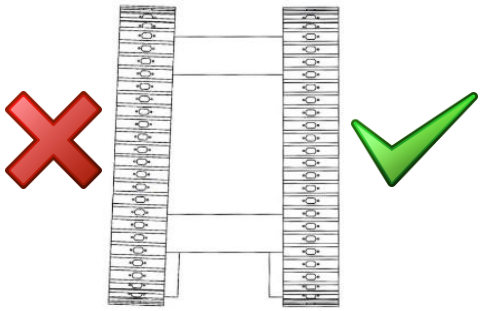

Tracks must be fitted parallel to each other and square to the machine.

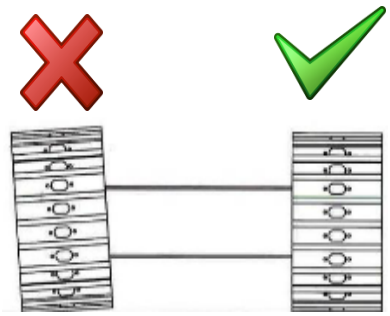

Post assembly - Level Check

On completion of assembly to the host machine, the tracks should be checked to ensure they are parallel and perpendicular to each other and the chassis.

Ensure track roller sole plates are used for the datum; track shoes can only be used as a reference.

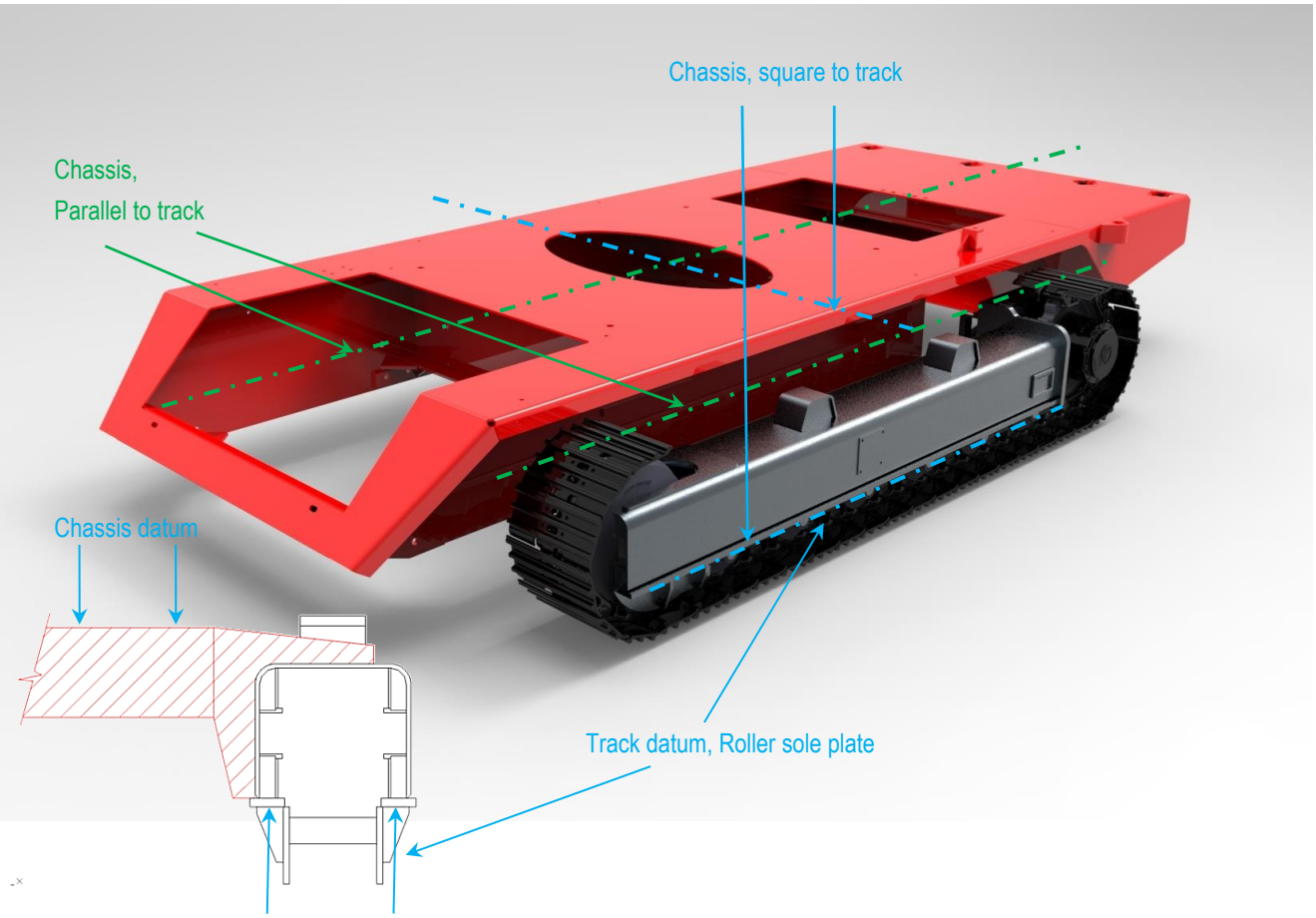

2.1.4 Machine Centre of Gravity

The position of the machine center of gravity in relation to the tracks is very important, affecting the life and operation of the undercarriage.

It is key to position the track central to the machine CofG, as this will avoid unnecessary / uneven wear on components and prevent the tracks from digging down in loose ground conditions whilst turning/slewing.

Failure to correctly position the tracks central to the machine CofG can result in uneven and excessive wear or in extreme cases undercarriage failure.

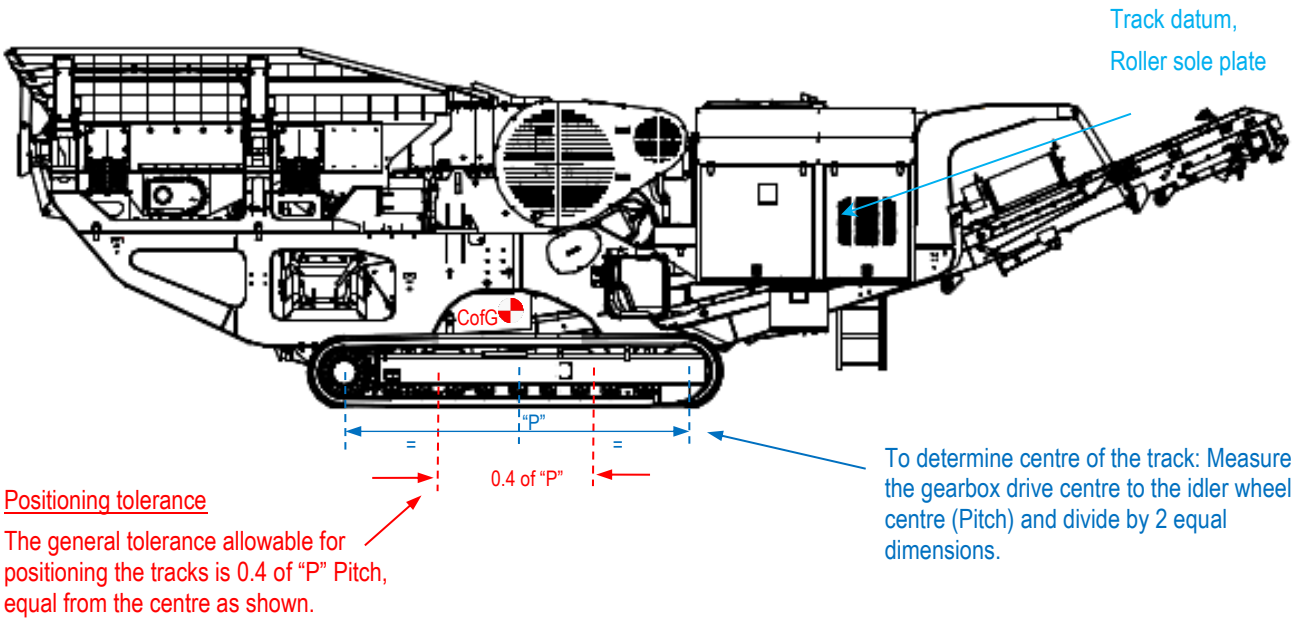

To check the machine CofG, a physical test can be carried out by tracking the machine over an object to see at which point the machine tips, shown following.

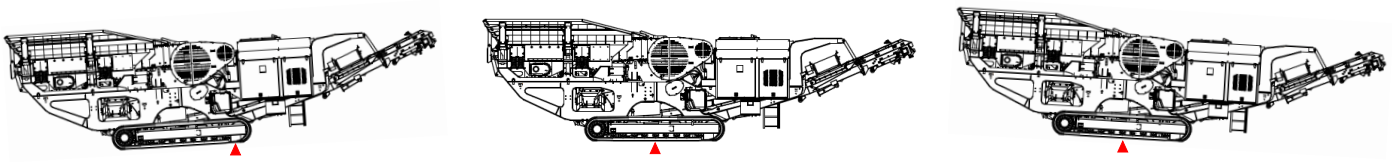

PRECAUTIONS

- Always consider the **machine transportation** configuration and the switch of CofG position when positioning the track system.
- Always consider the various **machine options** in conjunction with the machine transportation and the resulting CofG position when positioning the track system.

2.2 HYDRAULICS INSTALLATION

Hydraulic installation of each individual track system is fully explained in the Parts Supplement. This document also includes following information:

- Hydraulic hose and fitting kit
- Track drive ports identification and sizes
- Required hydraulic connections
- Hydraulic schematic
- Operating pressures and flows
- Gearbox oil type, quantity and operating temperature, and
- Hydraulic filtration and cleanliness.

Electronic versions are available at www.stricklandtracks.com by entering your password, which can be obtained by directly contacting us.

2.2.1 Hydraulic Track Drives

Primarily, Strickland track systems are installed with track drive gearboxes with two types of hydraulic motors.

- Dual displacement (2-speed)
- Fixed displacement (single speed)

2.2.1.1 Track Drives Fitted with Dual Displacement Motor

These dual displacement track drives are fitted with hydraulically controlled 2-speed motors, switchable between displacements by applying a separate pressure to the displacement change port.

They can be run as 2-speed motors or single speed, depending upon the connections made as shown below.

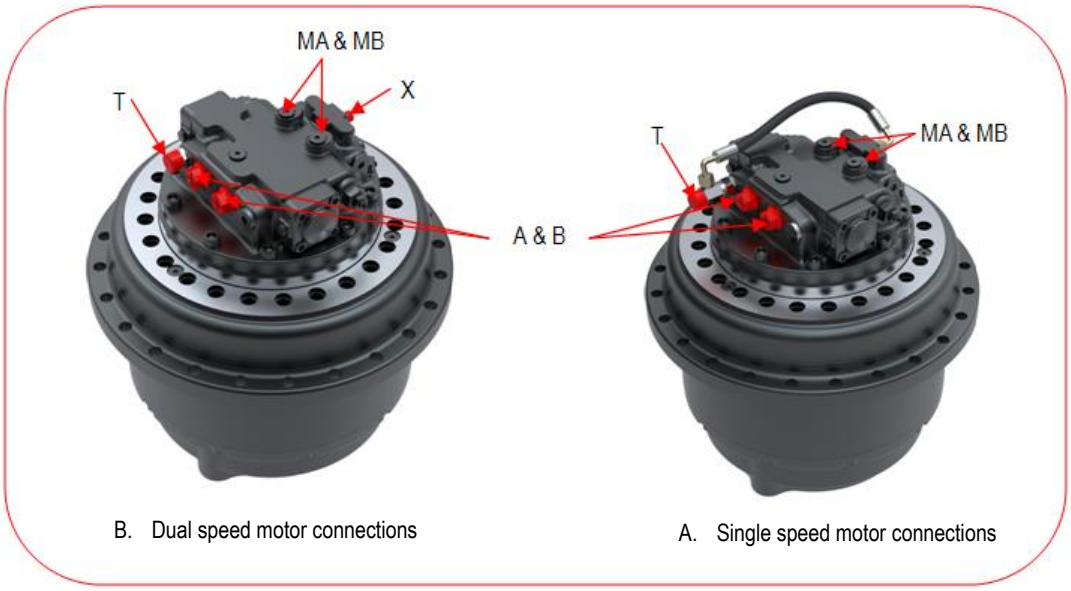

Note: Drain line connected to port T, must be installed in such a manner that the motor housing cannot empty when standing still, i.e. drain line at highest possible point.

2.2.1.2 Track Drives Fitted with Fixed Displacement Motor

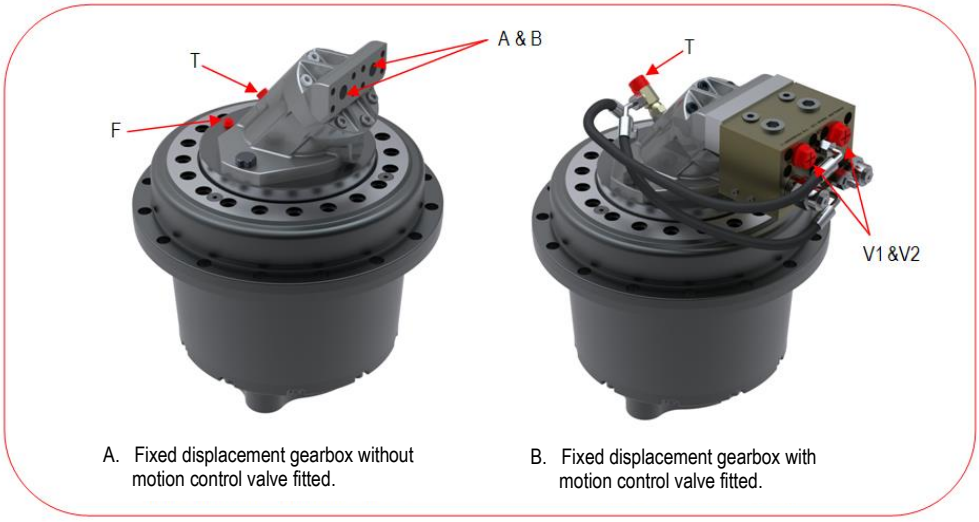

A. Fixed displacement gearbox without motion control valve fitted.

B. Fixed displacement gearbox with motion control valve fitted.

2.2.2 Track Drive Ports and Port Functions

2.2.2.1 Main Flow Ports, A & B or V1 & V2

Flow and pressure of hydraulic oil is applied to these ports, to achieve forward and backward movement. Torque and speed output are dependent on the pressure and flow applied.

2.2.2.2 Case Drain Port, T

Case drain port allows any excess hydraulic oil to return to tank.

2.2.2.3 Brake Release Port, F

With a pressure applied to this port, multi disc parking brake is released, allowing rotation of the track drive. When no pressure is applied, the parking brake is locked on.

If the brake release feed is supplied directly from your machine, to avoid damage of the internal brake system, please adhere to the following:

Ensure the machine software allows the brake to release 0.5 seconds before any pressure is applied to the main flow ports. Similarly, a delay is required of 0.5 seconds before brake engagement after pressure from main flow ports is released.

2.2.2.4 Displacement Change Port, X

Pilot pressure port for controlling the displacement change of the motor between maximum and minimum, with a relative effect on the output speed of the final drive.

To activate the displacement change function, the recommended pilot pressure (stated on the individual parts supplement) must be achieved.

Please note this is a recommended minimum pressure. It is possible the displacement change can occur at lower values, dependent on various aspects including oil temperatures and motor case drain pressures.

The displacement change port is assumed to have zero pressure applied during standard, low speed operation. Only when a displacement change is required should any pressure be applied. If, however your hydraulic system allows any pressure in this port to build up, or be retained - please contact Strickland Tracks, as an alternative specification may be required.

2.2.2.5 Measuring Ports, MA & MB

Measuring ports are used to measure running pressures for testing purposes if required. Ports are blanked off during normal operation.

2.2.3 Motion Control / Brake Release Valves

Motion control / brake release valves are designed for use on open loop hydraulic circuits only. These valves are generally supplied fitted and hosed to the hydraulic motor flange as shown in above image, section 2.2.1.2.

The valve has two main functions:

- To take a feed from the main pressure line to pressurise the brake release port of the gearbox with a controlled pressure, releasing the multi disc parking brake whenever any flow/pressure is applied to the hydraulic motors, prior to driving the gearbox.
- To prevent overrun of the motor as the machine descends any gradient, avoiding over-speeding and therefore a run-away condition. This motion control function operates in both directions of rotation.

PRECAUTIONS

- Before connecting track drives to any hydraulic circuit, ensure all pipes are removed and flushed through with the hydraulic system prior to connection.
- To ensure proper function of the hydraulic motor, the filtration of the pressure fluid must provide a cleanliness level of at least: **20/18/18 according to ISO 4406**

SECTION 3:
BASIC MAINTENANCE

3.1 CORRECT MAINTENANCE PROCEDURE

In order to maintain the reliability of the track systems, regular maintenance is essential. It is imperative that the tracks are maintained as outlined within this maintenance section.

ALWAYS:

- Perform maintenance in a clear, safe area, on a level and solid surface.
- Ensure the track system is solidly supported if work is necessary under the track systems.
- Remove any build-up of grease, oil or debris.
- Repair all damage and replace worn or broken parts immediately.
- Check for oil leaks and damaged hydraulic hoses.
- Use only specified lubricants. Do not mix different brands or types.
- Use great care when maintaining the hydraulic system since oil may be very hot when the machine has just been working.
- Use only ***Strickland Tracks Ltd*** supplied/approved replacement parts. Use of unapproved parts will invalidate the warranty.
- Dispose of lubricants in the proper manner.

3.2 MAINTENANCE CHECKS

Please note that the maintenance intervals specified below are for track systems working under normal conditions. If the track system is used in severe working conditions, the maintenance and safety checks must be performed more frequently.

Components	Checklist	Weekly Checks	Monthly Checks	Yearly Checks
Idler	Oil Leakage	✓		
	Wear Limits			✓
Lower Roller	Loose nuts and bolts	✓		
	Oil Leakage	✓		
	Wear Limits			✓
Sprockets	Loose nuts and bolts	✓		
	Wear Limits			✓
Track Drive	Loose nuts and bolts	✓		
	Oil Quantity		✓	
	Oil Leakage	✓		
Track Group	Any damage to track links, pins and track shoes	✓		
	Loose nuts and bolts	✓		
	Tight or Seized track joints	✓		
	Track tension	✓		
	Wear Limits on track links			✓
	Wear Limits on track shoes			✓
Track System Fabrication	Structural damage or failure		✓	

After identifying any problems, take corrective action immediately; tighten bolts and nuts to correct torque, replace damaged or worn components, and refill oil up to recommended levels.

WARNING

DO NOT operate the tracks with damaged or defective components. Any persistent problem should be reported to the machine manufacturer.

3.3 CHECKING TRACK TENSION

Stop your machine on solid and level ground and drive 2 metres (minimum) in a forward direction. Measure the sag on the top part of the track on the longest section of unsupported track as shown below.

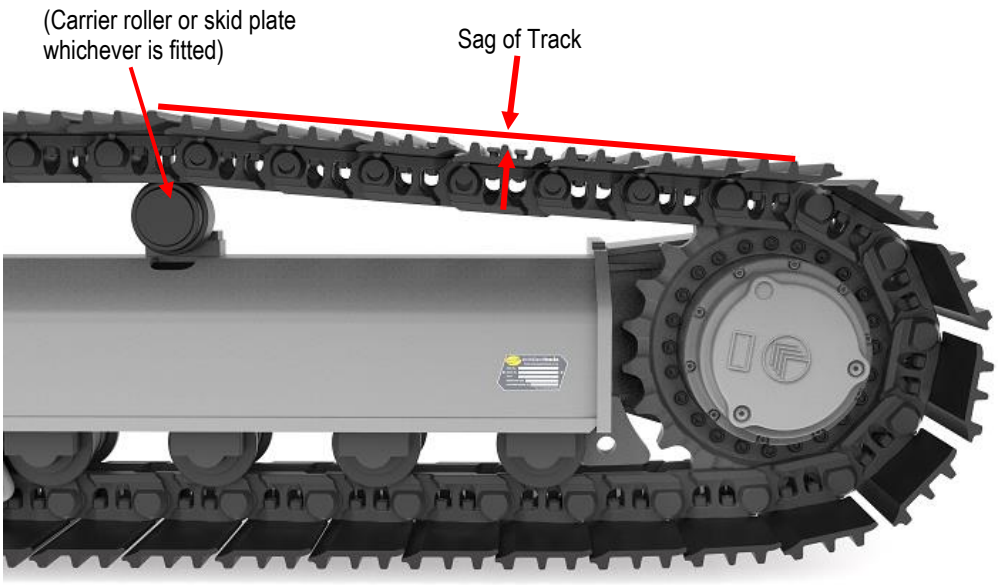

The sag of the track must be between **5mm** and **15mm.**

The above conditions must be fulfilled on a new track system. This must also be regularly checked and corrected if necessary, by adding grease to the grease tensioner, as described in **Section 3.4**.

3.4 TRACK TENSION

3.4.1 Tightening the Track

1. Ensure the grease fitting and grease gun adaptor is clean; ingress of dirt into the grease fitting can result in failure. Connect a grease gun to the grease fitting and add grease until the track tension is within the specified values given in **Section 3.3**.
2. Drive 50 metres forwards and 50 metres backwards and repeat the above procedure if the track slackens.

3.4.1 Slackening the Track

1. Loosen the grease fitting, by turning in an anti-clockwise direction, using gradual increments until the grease begins to be expelled. Care must be taken not to loosen the grease fitting too quickly.
2. When the correct track tension has been obtained, tighten the grease fitting by turning in a clockwise direction and clean away all trace of extruded grease. Grease adapter torque 74lb.ft (100Nm), be sure not to over tighten the grease fitting.

If the track fails to slacken after grease fitting has been loosened; **DO NOT** attempt to remove the tracks or disassemble the track tensioner, and **DO NOT** remove the grease fitting from the tensioner. It is possible that running the tracks a short distance in both directions with the grease fitting loosened may help to expel the grease.

IF IN DOUBT, PLEASE CONTACT HELPLINE
+44 (0)1386 862800

WARNING

The above procedure involves working with grease contained at high pressure and must only be carried out by qualified fitters.

3.5 MASTER PINS

There are **two** main types of master pins used on Strickland tracks as explained below:

3.5.1 Press Type Master Pin

Press type master pins are identified either by an X-mark or a centre drill mark on the end faces. To remove or install press type master pins a hydraulic press must be used **(shown in section 3.7.1)**. Pictorial views of press type master pin including spacers are shown below.

3.5.2 Dowel Type Master Pin

Dowel type master pins are more common and can be identified by the location type head. Dowel type master pins can easily be installed using a copper hammer due to the clearance fit. Pictorial view of a dowel type master pin including spacers is shown below.

Note: For further information regarding master pin installed on your track system, please refer to **Parts Supplements** document provided with your track system.

3.6 REMOVING THE TRACK

To uncouple the track group the following procedure must be followed:

1. Jack up the machine and block safely on firm, level ground.
2. Locate the master pin.
   a) If tracks are installed with Press type master pin. This can be identified by small circular indentations, or by an X marked on each of the end faces.
   b) If tracks are assembled using Dowel type master pin. The flat head of master pin or slotted face of links should be used for identification.

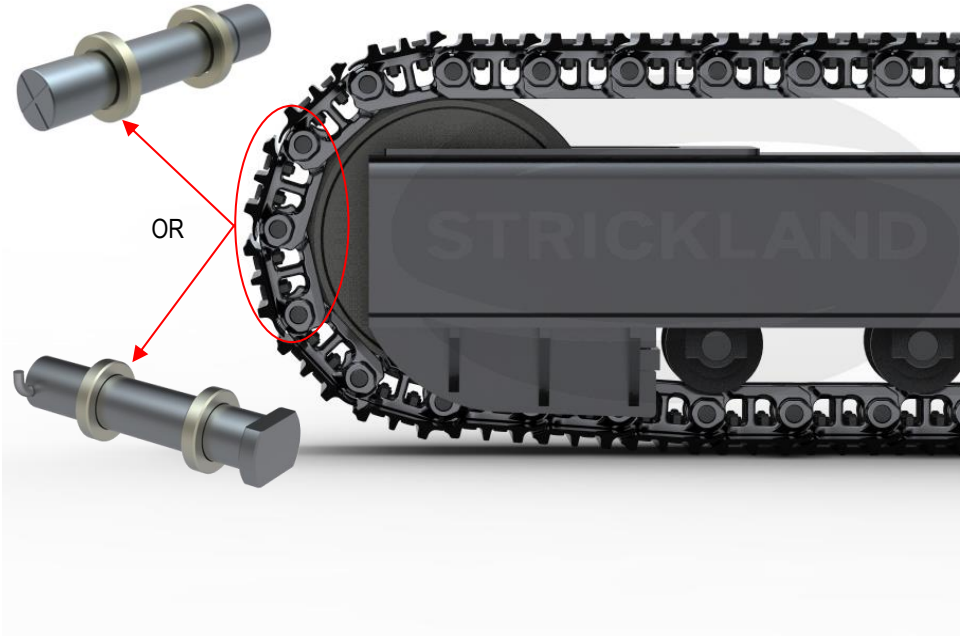

3. Rotate the track until the pin is in approximate position (as shown above) and place a block under the front of track. This prevents the chain from dropping once the master pin has been removed.
4. Release the tension on the tracks as described in Section 3.4; this should only be carried out by a qualified fitter.
5. Remove master pin.
   a) In case of Press type master pin, the pin can be pressed out from the chain, separating the track.
   b) To remove Dowel type master pin, unsecure the dowel first and use copper hammer to strike the master pin out.
6. The track can now be pulled from under the machine.

WARNING

When removing the press type master pin, do not use a sledge hammer. This may cause splintering of the metal with the possibility of personal injury.

3.7 RE-JOINING THE TRACK

To rejoin the track group, the following procedure must be followed, but should only be carried out by qualified fitters:

3.7.1 Re-joining Track Using Press Type Master Pin

1. Position the pin collars into the counter bore of the mating links.
2. Ensure the pin holes and the bushings are aligned and insert a dummy pin.
3. With the master pin in position, set up the track press.
4. Using track press, push the master pin fully into the chain links, pushing the dummy pin through the link. The picture below shows a typical example of C-press.

3.7.2 Re-joining Track Using Dowel Type Master Pin

1. Position the pin collars into the counter bore of the mating links.
2. Ensure the pin holes and the bushings are aligned.
3. Use the copper hammer to strike the flat head of master pin to tap it into the chain links.
4. With the master pin inserted fully into the chain links, it must be secured in position using a dowel (locking pin). Following picture demonstrates the use of copper hammer to tap in the hammer type master pin.

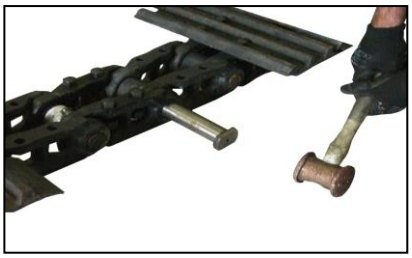

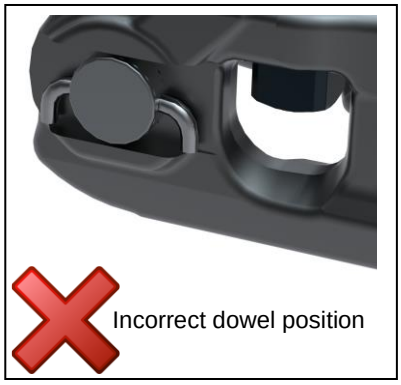

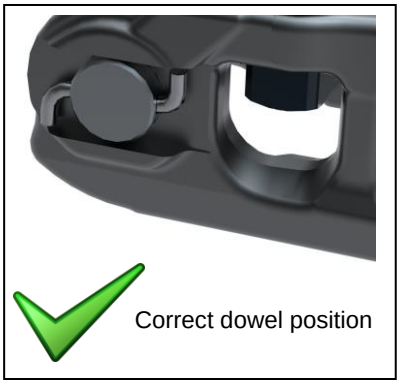

IF IN DOUBT, PLEASE CONTACT HELPLINE +44 (0)1386 862800

WARNING

When removing the press type master pin,
do not use a sledge hammer.
This may cause splintering of the metal with the possibility
of personal injury.

3.8 TRACK REPAIR LINK KIT

A typical image of track repair link kit is shown below followed by list of components and their quantities included in kit.

Index	Component Description	Quantity
1	Left hand master link	1
2	Right hand master link	1
3	Master bushing	1
4	Master pin with collars (Press type)	1
5	Master pin with collars (Dowel type)	1
6	Track shoe bolt	4
7	Track shoe nut	4

Note: The kit is supplied with the master bushing pressed into the left- and right-hand links.

To order a new track repair link kit, please contact ***Strickland Tracks Ltd.*** quoting your track serial number or track part number or track repair link kit part number. Please refer to **Parts Supplement** document to identify track repair link kit part number.

3.9 TRACK DRIVE UNITS

3.9.1 Oil Filling & Draining

Below are the 3 common oil filling/draining configurations, if your gearbox is not shown below please contact **Strickland Tracks Ltd** for further details.

To fill, track the machine until the gearbox casing is level with a plug positioned as shown below. Fill from the upper hole until oil reaches the level indicated.

To drain, track the machine until a plug is at **6 o'clock** position as shown below. Unscrew both plugs and allow all oil to discharge into a suitable container. Dispose of waste oil in a safe and approved way.

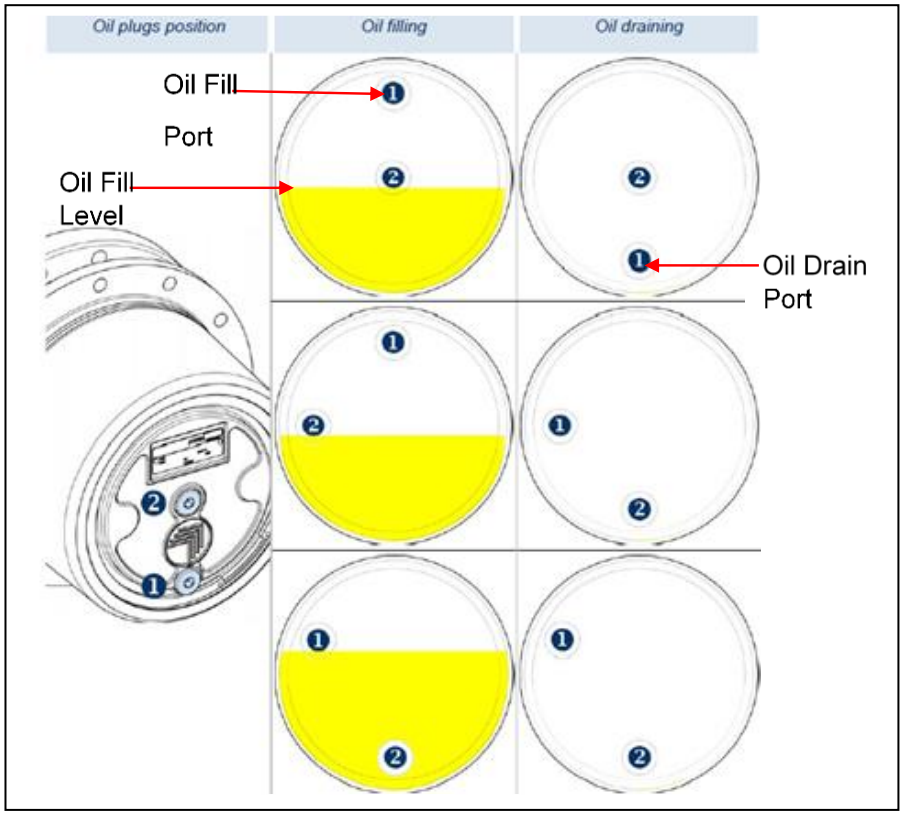

***Note*:** Please refer to **Parts Supplements** document for accurate oil quantities and type.

IF IN DOUBT, PLEASE CONTACT HELPLINE +44 (0)1386 862800

WARNING

Do not fill oil without checking oil level first.
All track systems are supplied by Strickland Tracks Ltd.
with a measured quantity of oil in track drive.

3.9.2 Gearbox Service Recommendations

INSPECTION	***FREQUENCY***	***ACTION***
Tightening screws	After first 50 operating hours of the gearbox	Screws tightened to correct torque
Oil Level	Every 150 operating hours of the gearbox	Refill oil as necessary
1st oil change	After 150 operating hours of the gearbox	Replace oil
Oil plugs with washers and seals	Every oil change	Replace Oil plugs with washers or seals

OIL TYPE	***WORKING CONDITIONS***	***OIL CHANGE FREQUENCY***
Mineral Oil	Standard Conditions	Every 1000 operating hours or 12 months
	Heavy Duty Conditions	Every 500 operating hours or 12 months
Synthetic Oil	Standard Conditions	Every 2000 operating hours or 24 months
	Heavy Duty Conditions	Every 1000 operating hours or 24 months

3.9.3 Manual Brake Disengagement of Track Drive

Strickland Tracks drives are fitted with negative parking brakes, therefore when no pressure is applied, the parking brake is locked on. Should the host machine need towing due to loss of drive power, there are two different solutions for towing the machine depending on the gearbox installed.

Gearboxes with Mechanical disengagement function:

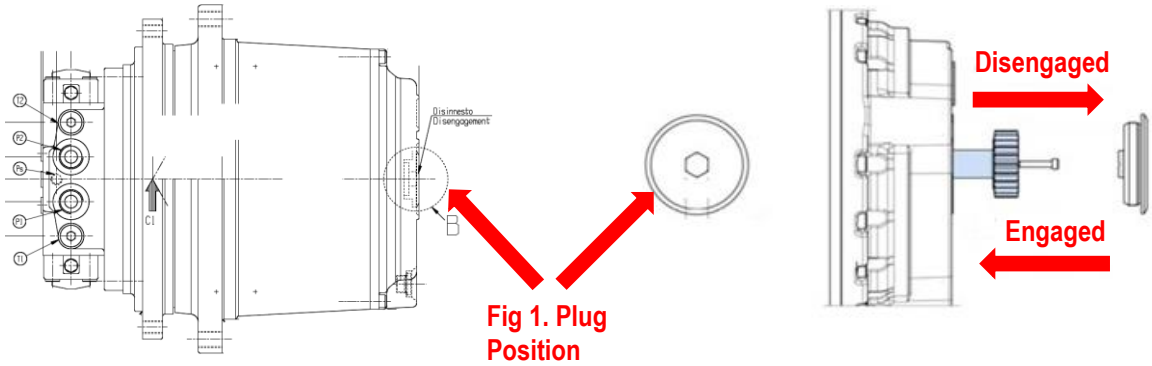

If the gearbox is supplied with the mechanical disengagement function, it can be identified by a plug situated on the outer face of the gearbox end cover, shown fig.1 above.

- Unscrew the disengagement plug from the end cover with a male hex head wrench.
- Use an M6x50-8.8 grade bolt and screw into the threaded hole of the 1st reduction sun gear.
- Pull out the 1st reduction sun gear from the gearbox.
- Fit the disengagement plug back in place to the end cover, if oil is lost at stage 3, replace lost oil prior to replacing disengagement plug.
- To re-engage the sun gear, simply repeat the above procedure, ensuring any oil lost is replaced.

Gearboxes without Mechanical disengagement function:

FOR FURTHER ASSISTANCE PLEASE CONTACT THE HELPLINE +44 (0)1386 862800

SECTION 4:
WEAR LIMITS

4.1 WEAR LIMITS

To ensure the most economical use of the track systems, it is important to determine the appropriate time to replace each of the worn parts.

The following section will describe the most accurate methods of measuring the wear of the various track system components.

Exact wear limits are dependent on the specific parts fitted to the track system supplied. Please refer to the Parts Supplement relative to the specification of track system supplied to find the required component part numbers.

WARNING

Under no circumstances should the machine be operated if the wear of any component is in excess of 100%.

4.2 TRACK SHOE WEAR

The most important wear of a track shoe is the relative height of the grouser to the top of the shoe plate. A depth gauge should be used to measure this, as shown in the diagrams below:

4.2.1 Triple Bar Grouser

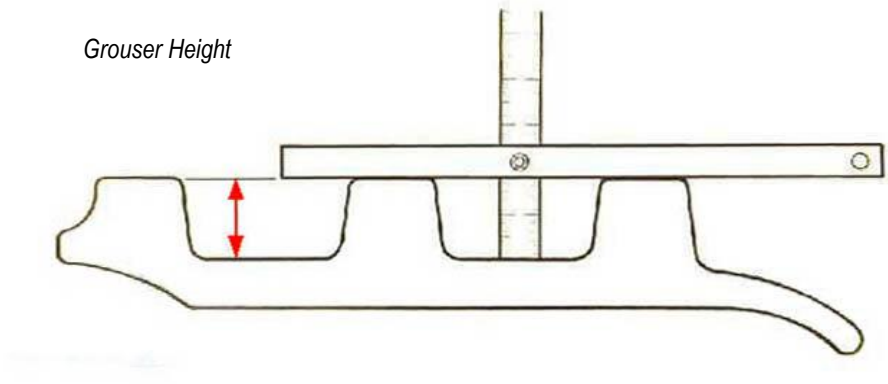

Shoe Part No.	New Shoe mm	Wear Percentage			
		25%	50%	75%	100%
		mm			
TBG000-010	14	13.5	13.1	12.6	12.2
TBG000-5L5	14	13.5	12.9	12.4	11.8
TBG000-505	18	17.4	16.8	16.2	15.6
TBG000-510	22	21.2	20.4	19.6	18.8
TBG000-014	25	24.2	23.4	22.6	21.8
TBG000-020	25.3	25	24.7	24.4	24.1
TBG000-070	26	25.4	24.8	24.2	23.6
TBG000-026	26.5	25.9	25.3	24.7	24.1
TBG000-027	26.5	25.9	25.3	24.7	24.1
TBG000-080	30	29.3	28.5	27.8	27

4.2.2 Double Bar Grouser

For double bar grouser shoes, the grouser height measurement should be taken across two shoes at a flat, tensioned position of the track, as shown in the diagram below:

Grouser Height

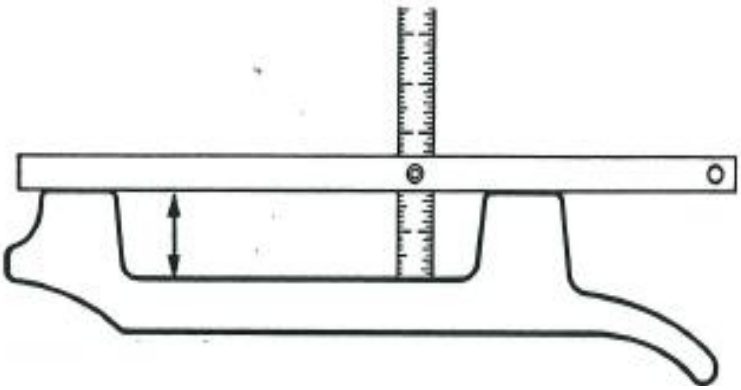

Shoe Part No.	New Shoe mm	Wear Percentage			
		25%	50%	75%	100%
		mm			
DBG000-014	30.0	29.2	28.4	27.6	26.7
DBG000-020	31.0	30.7	30.4	30.1	29.7
DBG000-026	34.5	33.9	33.3	32.7	32.0
DBG000-070	35.0	34.4	33.8	33.2	32.5

4.2.3 Single Bar Grouser

For single bar grouser shoes, the grouser height measurement should be taken across two shoes at a flat, tensioned position of the track, as shown in the diagram below:

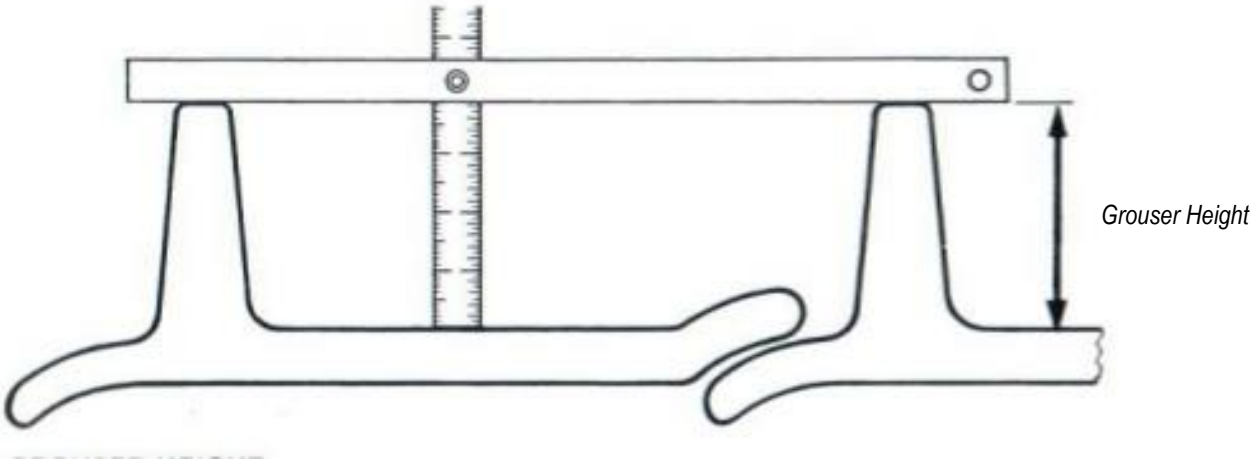

Shoe Part No.	New Shoe mm	Wear Percentage			
		25%	50%	75%	100%
		mm			
SBG000-505	43.0	41	39.5	38	36.5
SBG000-510	47.0	45.5	44	42.5	41
SBG000-014	52	50.5	49.0	47.5	46.0
SBG000-070	55.5	54.0	52.5	51.00	49.5

4.3 TRACK LINK WEAR

To measure the wear, use a depth gauge and measure the depth from the bottom of the grouser shoe to the running surface of the track link.

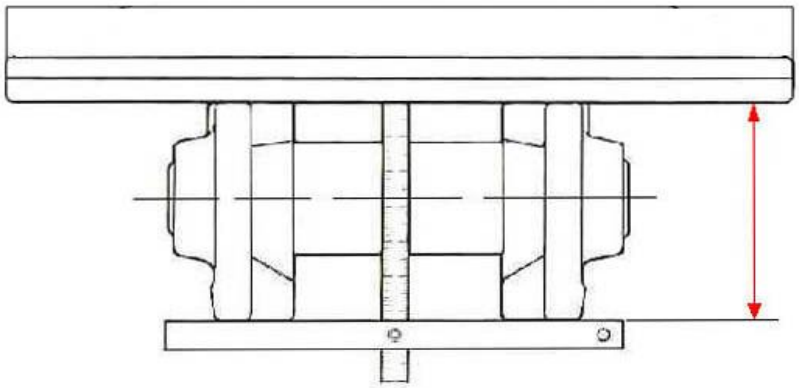

Link Part No.	New Link mm	Wear Percentage			
		25%	50%	75%	100%
		mm			
TCA000-010	70	69.8	69.6	69.4	69.2
TCA000-040	70	69.7	69.5	69.2	69
TCA000-045	83	82.8	82.6	82.4	82.2
TCA000-811	96	95.6	95.2	94.8	94.4
TCA000-640	103.2	103	102.8	102.6	102.4
TCA000-070	105	104.6	104.2	103.8	103.4
TCA000-071	121.5	121.1	120.7	120.3	119.9
TCA000-077	117.5	115.6	115.2	114.8	114.4
TCA000-080	126	125.5	125	124.5	124

4.4 INTERNAL PIN AND BUSH WEAR

To determine the average internal pin and bushing wear measure across 4 sections of track chain comprising of 4 links (5 pins). This track section must not include the master pin, and should be on the upper side of the track. Block the track using a 40mm diameter steel bar in the sprocket, being careful not to foul the track frame or chassis of the machine. Reverse the machine until the track is taut across the top of the track system (maximum 1/8 turn of sprocket).

Measurement is made of the elongation of the chain pitch. A standard steel tape can be used. Measure as shown below:

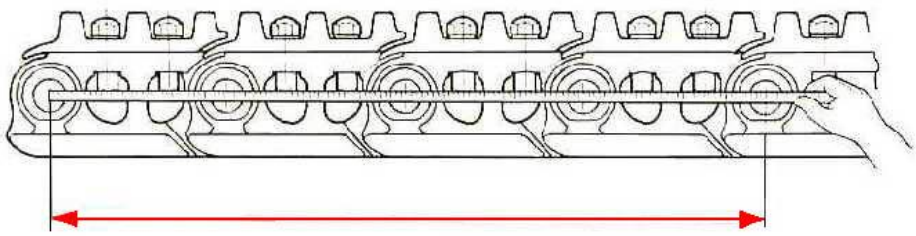

4 Sections of the Link Assembly

Chain Part No.	New Chain mm	Wear Percentage			
		25%	50%	75%	100%
		Mm			
TCA000-010	540.0	540.3	540.9	541.3	541.8
TCA000-040	560.0	560.5	561.0	561.5	562.0
TCA000-045	640.0	640.5	641.0	641.5	642.0
TCA000-811	685.8	686.2	686.6	687.0	687.4
TCA000-640	702.0	702.6	703.2	703.8	704.4
TCA000-070	760.0	761.0	762.0	763.0	764.0
TCA000-071	811.6	812.4	813.2	814.0	814.8
TCA000-077	811.6	812.4	813.2	814.0	814.8
TCA000-080	863.6	864.4	865.3	866.2	867.1

4.5 EXTERNAL PIN AND BUSH WEAR

Wear of the bushes is caused at the point of contact between the bushing and the sprocket tooth. To measure this wear, use a small outside caliper.

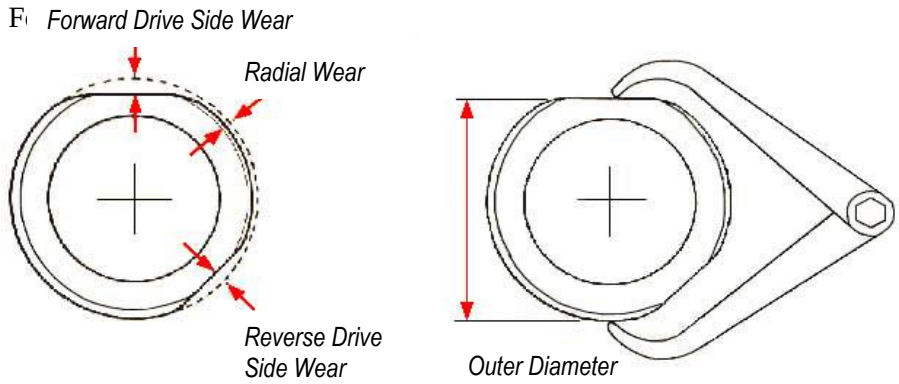

Outside wear of the bushings can be of any of the 3 types shown above. Measurements should be taken in each position and only the largest measurement should be considered.

Chain Part No.	New Chain mm	Wear Percentage			
		25%	50%	75%	100%
		Mm			
TCA000-010	39.0	38.9	38.8	38.7	38.6
TCA000-040	37.0	36.9	36.8	36.7	36.6
TCA000-045	45	44.9	44.8	44.7	44.6
TCA000-811	53.8	53.6	53.4	53.2	53.0
TCA000-640	58.7	58.6	58.5	58.4	58.3
TCA000-070	60.0	59.9	59.8	59.7	59.6
TCA000-071	66.7	66.6	66.5	66.4	66.3
TCA000-077	66.7	66.6	66.5	66.4	66.3
TCA000-080	71.4	71.3	71.2	71.1	71

4.6 LOWER ROLLER WEAR

The tread wear of the roller is the most important wear area and is measured on the roller diameter. The most suitable tool is a large outside caliper.

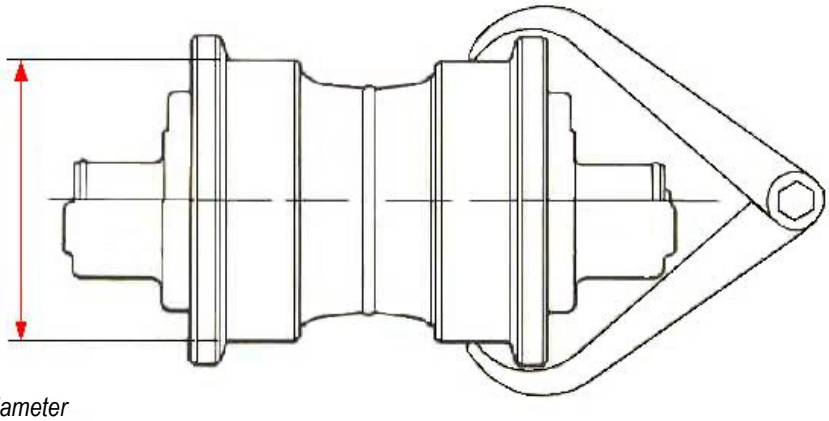

Rail Diameter

The correct measurement is to measure the diameter of both tread surfaces of the roller. Consider the tread with the smallest diameter.

Roller Part No.	New Roller mm	Wear Percentage			
		25%	50%	75%	100%
		Mm			
LRG-DS01 LRG000-000SC10A	125.0	124.5	124	123.5	123
LRG-DT01 LRG000-000SC003	135.0	134.5	134.0	133.5	133.0
LRG-DK01 LRG000-000SF60B	160.0	159.5	159.0	158.5	158.0
LRG-DL01 LRG000-000SC40A	155.0	154.5	154.0	153.5	153.0
LRG-NS01 LRG000-000SC60A	154.0	153.5	153.0	152.5	152.0
LRG-SD01 LRG000-000SC70A	180	179.5	179	178.5	178
LRG-SS01 LRG000-000SC80A	200	199.5	199	198.8	198

4.7 CARRIER ROLLER WEAR

The tread wear of the roller is the most important wear area and is measured on the roller diameter. The most suitable tool is a large outside caliper.

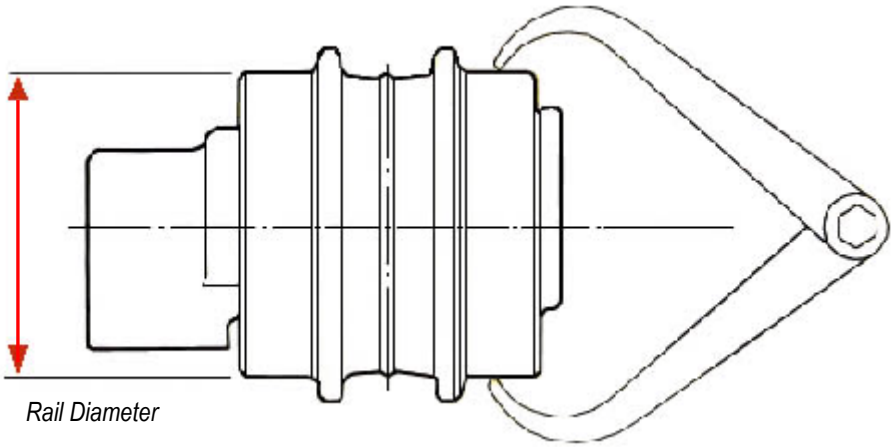

The correct measurement is to measure the diameter of both tread surfaces of the roller. Consider the tread with the smallest diameter.

Roller Part No.	New Roller mm	Wear Percentage			
		25%	50%	75%	100%
		Mm			
CRG-DT01 CRG000-140	110	109.5	109	108.5	108
CRG-DL01 CRG000-130-A	140	139.5	139.0	138.5	138.0
LRG-DK01	160	159.5	159	158.5	158
LRG-DK02 LRG000-000SF60B-SD	135	134.5	134	133.5	133
CRG-SS01 CRG 216	160	159.5	159	158.5	158

4.8 FRONT IDLER WEAR

Radial tread wear is the most important factor. The simplest method of measuring tread wear is to measure the depth of tread from the centre of the idler.

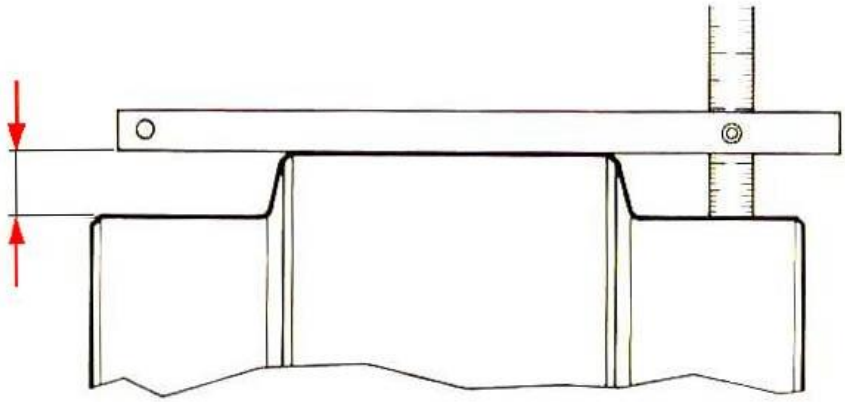

Rail Height

The correct measurement is to measure both tread surfaces of the idler. Consider the tread surface with the smallest diameter.

Idler Part No.	New Idler mm	Wear Percentage			
		25%	50%	75%	100%
		Mm			
IDG000-380-DS	12.5	12.7	12.9	13.1	13.3
IDG000-2761-4	16.0	16.2	16.4	16.6	16.8
IDG000-5061-5	17.0	17.2	17.4	17.6	17.8
IDG000-502-A	26.0	26.2	26.5	26.7	27.0
IDG000-660550	20.0	20.2	20.5	20.7	21.0
IDG000-610-0	20.0	20.2	20.5	20.7	21.0
IDG000-0770-0	22.5	22.7	23	23.2	23.5

4.9 SPROCKET WEAR

Sprocket wear is very difficult to assess accurately. In fact, under normal working conditions, the wear occurs in such a way that no trace of the original toothing remains as a valid reference for measuring the wear. It is therefore impossible to provide 100% accurate data for wear measurement.

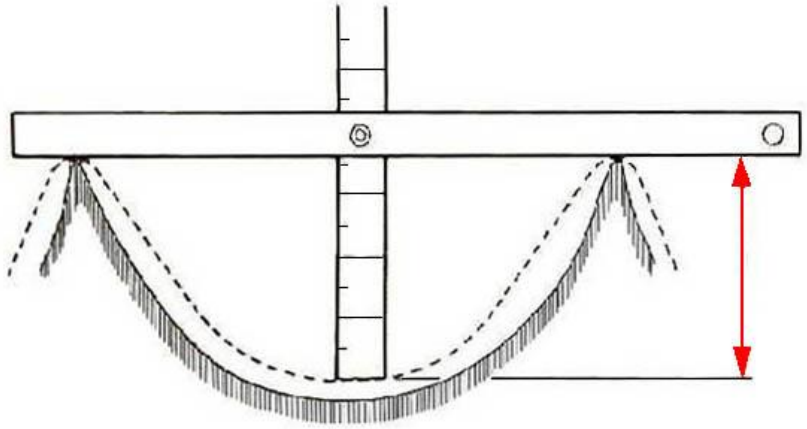

As an approximate rule, the sprocket should be replaced when wear has reached the limits shown in the above illustration.

As the wear is never uniform, it is necessary to consider the point at which the wear is at a maximum.

Sprocket Part No.	New Teeth mm	Wear Percentage			
		25%	50%	75%	100%
		Mm			
SPA DS	30.0	30.2	30.4	30.6	30.8
SPA DT	26.0	26.2	26.4	26.6	26.8
SPA DK	33.2	33.4	33.6	33.8	34.0
SPA DL	34.1	34.4	34.7	35.0	35.3
SPA NS	34.8	34.1	34.4	34.7	35.0
SPA NT	42.0	42.2	42.4	42.6	42.8
SPA DN	41.5	41.7	41.9	42.1	42.3
SPA SS	46.0	46.2	46.5	46.7	47

SECTION 5:
TROUBLESHOOTING

5.1 TRACK TENSION

Track systems use a grease cylinder to keep the track chains in tension. Loss of tension in the tracks can result in the sprocket jumping in the track chain, and also allowing the track chain to run off the idler/sprocket. This can hinder the tracking ability of the machine and damage many of the components of the track systems if not resolved quickly.

The tension of the tracks should be checked on a regular basis according to the parameters set out in Section 3.3 of this manual; General Maintenance. If the tension of the track is outside these parameters, and the adjustment method given in paragraph 3.4 has no effect, please read below checks that can be made and possible causes:

CHECK	POSSIBLE CAUSE
With the greaser access plate removed **(see Section 3.4)**, make a visual inspection of the greaser, looking for any signs of leaking grease.	If grease is leaking from the base of the greaser, where it screws into the end of the tensioner, either the gasket has failed and needs replacing, or the greaser is not screwed in properly and needs tightening. If grease is leaking from the end of the greaser where the grease gun connects to it, the greaser valve has failed and should be replaced.
When the machine is stationary and blocked, make a visual inspection of the track below the adjusting end of the tensioner, looking for any signs of leaking grease. Also, reach under the frame, feeling the adjusting end of the tensioner for any grease.	If grease is leaking from the adjusting end of the cylinder, the seals may have failed. This requires the tensioner to be removed from the tracks frame, to be either fitted with new seals, or replaced with a completely new grease tensioner.

If the above checks have been carried out with no signs of any faults, please contact the helpline for further assistance.

IF IN DOUBT, PLEASE CONTACT HELPLINE
+44 (0)1386 862800

5.2 LOSS OF DRIVE

Crawler track systems are driven using hydraulic motors connected to planetary drive gearboxes. The hydraulic motors are driven using the hydraulics fitted to the machine.

Begin by making a visual inspection of the tracks, particularly around the sprocket, idler and bottom rollers where material / objects can sometimes lodge. Follow this by inspecting all hoses and connections, ensuring there are no leaks or blocks. If there are no physical impedances in the tracks and no faults are found with hoses and connectors, please read below checks that can be made and possible causes:

CHECK	POSSIBLE CAUSE
Using pressure / flow testing equipment, measure the values of the flow and pressure being applied to the hydraulic motors.	If the values of the flow and pressure passing to the hydraulic motors is less than that required to drive the tracks (see machine manufacturer's separate publication), there may be a fault in the machines hydraulic system.
Test the pressure being applied to the brake release port on the gearbox. In order to release the brake, this should be fed with a pressure of between 12 and 50 bar.	If the pressure is below 12 bar, do not attempt to drive the tracks. With a pressure below 12 bar, the brake will not release when driving the tracks is attempted. This can cause the brakes to seize requiring a replacement unit to be fitted.
If a valve is fitted to the hydraulic motor flange, ensure there are no visible faults with the valve, and none of the connections are damaged / leaking.	If there are no visual faults with the valve, and all other checks identify no faults, the valve block may need replacing.

If the above checks have been carried out with no signs of any faults, please contact the helpline for further assistance.

IF IN DOUBT, PLEASE CONTACT HELPLINE
+44 (0)1386 862800

5.3 LEAKS AND SEIZURES

5.3.1 General Components

Many components fitted to crawler track systems such as rollers and idlers are lubricated with oil. Regular checks should be made to ensure these components are not leaking and rotate freely when the tracks are driven. Any items such as rollers which show signs of leaking, or fail to rotate when the tracks are driven should be replaced immediately.

5.3.2 Track Chains

It is important to be aware of the type of conditions in which the tracks are working. If the tracks are working in materials which cause corrosion to carbon steel, you must replace standard tracks with lubricated tracks to avoid seizure of the track joints. Lubricated tracks are available as an optional extra from new or as a retrofit for customers entering adverse working conditions.

Track chains can also seize in particular conditions if they remain stationary for more than a few days, causing kinks in the chain. This can be prevented by tracking the machine 50 meters forward and 50 meters backwards on a daily basis. However, should this problem occur, it may be possible to remedy by applying penetrating fluid to the seized pin, leaving for several hours, then tracking the machine several meters forward and back.

If lubricating the pin is unsuccessful, the problem can be resolved by cutting out the seized link including the pin and bush, replacing it with a complete repair link.

If there are several links seized on a single-track chain, it may be necessary to remove the track from the machine and have it repaired at a specialized track repair shop, or to replace the complete track chain.

5.4 LOSS OF PARALLEL DRIVE

Crawler track systems are driven by hydraulic track drive units. Drives consist of a hydraulic motor connected to planetary drive gearbox.

Power is relative to the hydraulic pressure and speed is relative to the hydraulic flow from the machines hydraulic circuit. Please refer to the Parts List and Hydraulic Specifications document for maximum pressure and flow settings for each individual track system. Under recommended pressure and flow conditions, if tracked undercarriage shows loss of parallel drive and machine starts slewing, please read below checks that can be made and possible causes:

CHECK	POSSIBLE CAUSE
Using pressure and flow testing equipment check the values of the flow and pressure being applied at the hydraulic motors.	If hydraulic pressure and flow being supplied to the motors is different from one another, the machine hydraulic pressure and flow settings may need to be adjusted.
Test to ensure a pressure is being applied to the brake release function on the gearbox. To release the brakes, generally pressure ranges between 12 and 50 bar.	If the pressure being applied at brake release port is below required pressure, do not attempt to drive the track system. Trying to drive the tracks without releasing the brakes could result in gearbox failure and void the warranty.
Using pressure testing equipment, test pressure on return drain line from motor to ensure back pressure does not exceed 2 bar. Excessive back pressure in the drain can cause automated switching of motor displacement on integrated motors.	Drain Blockage in hydraulic circuit between motor and hydraulic tank.

If the above checks have been carried out with no signs of any faults, please contact the helpline for further assistance.

IF IN DOUBT, PLEASE CONTACT HELPLINE
+44 (0)1386 8628

SECTION 6:

APPENDIX

6.1 Bolt Torque Tables

If not otherwise specified, use the following torque settings. Tolerance (±10%).

Metric Coarse Thread

Thread Size	Grade 8.8				Grade 10.9				Grade 12.9			
	Bond-Loc		Nord-Lock		Bond-Loc		Nord-Lock		Bond-Loc		Nord-Lock	
Dia Pitch	lb.ft	Nm	lb.ft	Nm	lb.ft	Nm	lb.ft	Nm	lb.ft	Nm	lb.ft	Nm
M6 x 1.00	10	15	10	15	10	15	10	15	15	20	15	20
M8 x 1.25	20	25	20	25	25	35	30	40	30	40	35	45
M10 x 1.50	35	45	40	55	50	70	60	80	60	80	70	95
M12 x 1.75	65	90	70	95	90	120	100	135	110	150	120	160
M14 x 2.00	105	140	115	155	145	195	160	215	175	235	190	255
M16 x 2.00	160	215	180	245	225	305	250	340	270	365	300	405
M18 x 2.50	220	300	245	330	310	420	345	465	370	500	415	560
M20 x 2.50	310	420	345	465	440	595	490	665	525	710	585	790
M22 x 2.50	425	575	470	635	595	805	665	900	715	970	795	1075
M24 x 3.00	540	730	600	810	760	1030	845	1145	910	1230	1010	1370
M30 x 3.50	1070	1450	1190	1610	1510	2045	1675	2270	1810	2450	2010	2720

Metric Fine Thread

Thread Size	Grade 8.8				Grade 10.9				Grade 12.9			
	Bond-Loc		Nord-Lock		Bond-Loc		Nord-Lock		Bond-Loc		Nord-Lock	
Dia Pitch	lb.ft	Nm	lb.ft	Nm	lb.ft	Nm	lb.ft	Nm	lb.ft	Nm	lb.ft	Nm
M6 x 1.00	10	15	10	15	10	15	15	20	15	20	15	20
M8 x 1.25	20	25	20	25	30	40	30	40	35	45	35	45
M10 x 1.25	40	55	45	60	55	75	60	80	65	90	75	100
M12 x 1.25	70	95	80	110	100	135	110	150	120	160	130	175
M14 x 1.50	110	150	125	170	155	210	175	235	190	255	210	285
M16 x 1.50	170	230	190	255	240	325	265	360	285	385	320	435
M18 x 1.50	250	340	275	370	350	475	385	520	420	570	465	630
M20 x 1.50	345	465	385	520	485	655	540	730	585	790	650	880
M22 x 1.50	465	630	520	705	655	885	730	990	790	1070	875	1185
M24 x 2.00	585	790	655	885	825	1115	920	1245	990	1340	1100	1490
M30 x 2.00	1185	1605	1320	1785	1670	2260	1855	2510	2005	2715	2225	3015

Imperial Thread

Standard UNC and UNF Bolts and Nuts						
Bolt Size - Thread Diameter (inches)	Recommended Bolt Torque Value (Nm | lb.ft)					
	I.S.O. Grade 10.9		I.S.O. Grade 10.9		I.S.O. Grade 12.9	
	UNC		UNF		UNF	
	Nm	*lb.ft*	Nm	*lb.ft*	Nm	*lb.ft*
7/16"	79	*58*	87	*64*	95	*70*
1/2"	125	*92*	173	*128*	208	*153*
9/16"	172	*127*	191	*141*	252	*186*
5/8"	206	*152*	289	*213*	347	*256*
3/4"	380	*280*	535	*395*	640	*472*
7/8"	547	*403*	765	*564*	920	*679*
1"	723	*533*	1018	*751*	1463	*1079*

Track Shoe Bolt Torque Table

Track shoes must be fastened to the torque values shown in the following table.
Tolerance (±10%).
Values given are for nuts and bolts without lubricant.
If lubricated nuts and bolts are used the torque should be reduced by 15%.

Standard Metric & Imperial Track Shoe Bolts and Nuts		
Bolt Size - Thread Diameter	Recommended Bolt Torque Value (Nm | lb.ft)	
	I.S.O. Grade 12.9	
	Nm	*lb.ft*
M12 x 1.0	163	*120*
M14 x 1.5	252	*186*
9/16	252	*186*
5/8	358	*264*
M18 x 1.5	575	*424*
M20 x 1.5	804	*593*
¾	620	*457*
M24 x 1.5	1489	*1100*